Mounting Flange MF01-20/H23

MagSpring™

Installation Instructions:

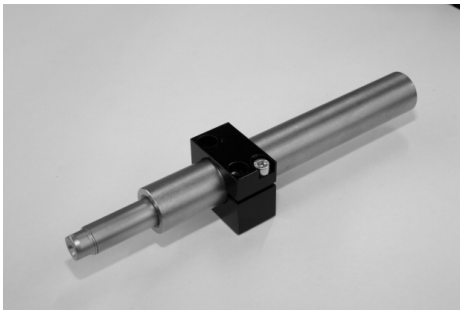

1. Install mounting flange with two M4 screws. Do not tighten at this time.
2. Position MagSpring in flange and tighten clamping screw - Max torque: 200 Ncm (1.475 ft lbs.) Over tightening may damage the MagSpring.
3. Tighten mounting screws.

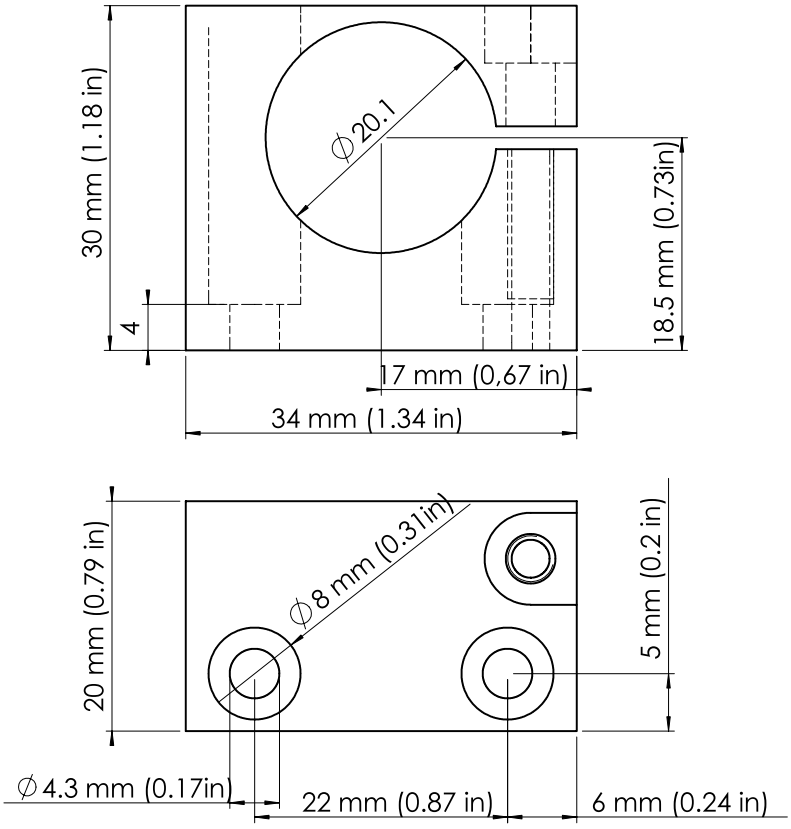

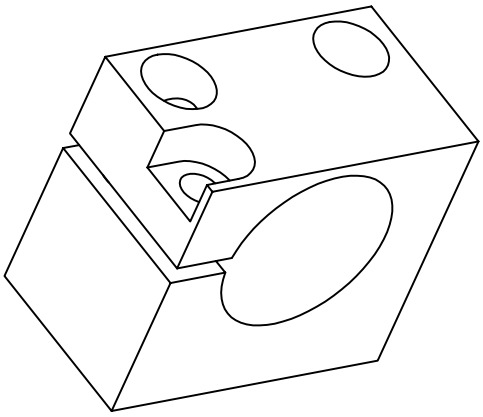

Material:	Aluminium (AlMgSi) Black anodized
Weight:	ca 30 g (0.066 lb)
Clamping screw:	M4 screw ISO 4762 (included)
Mounting screws:	M4 screw ISO 4762 (not included)
Part-No:	0200-2306
Description:	MF01-20/H23

NTI AG
MagSpring®
Technoparkstr. 1
CH-8005 Zürich / Switzerland

Phone: +41 1/445 22 82
Fax: +41 1/445 22 81
Email: office@MagSpring.com
Home: www.MagSpring.com

***LinMot®* Inc.**
Delavan, WI 53115
Email: us-sales@LinMot.com
Phone: 877 546 3270 Fax 800 463-8708
262-728-2699 262-740-0141