REV.	ECN NO.
00	----------

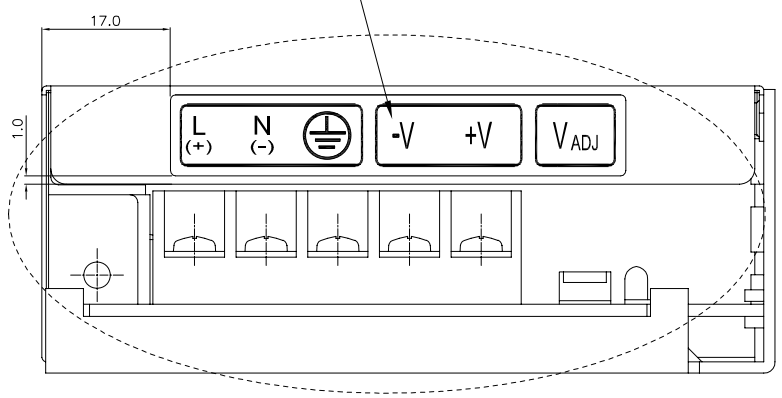

PRINTING DETAIL "B"
SCALE 2:1

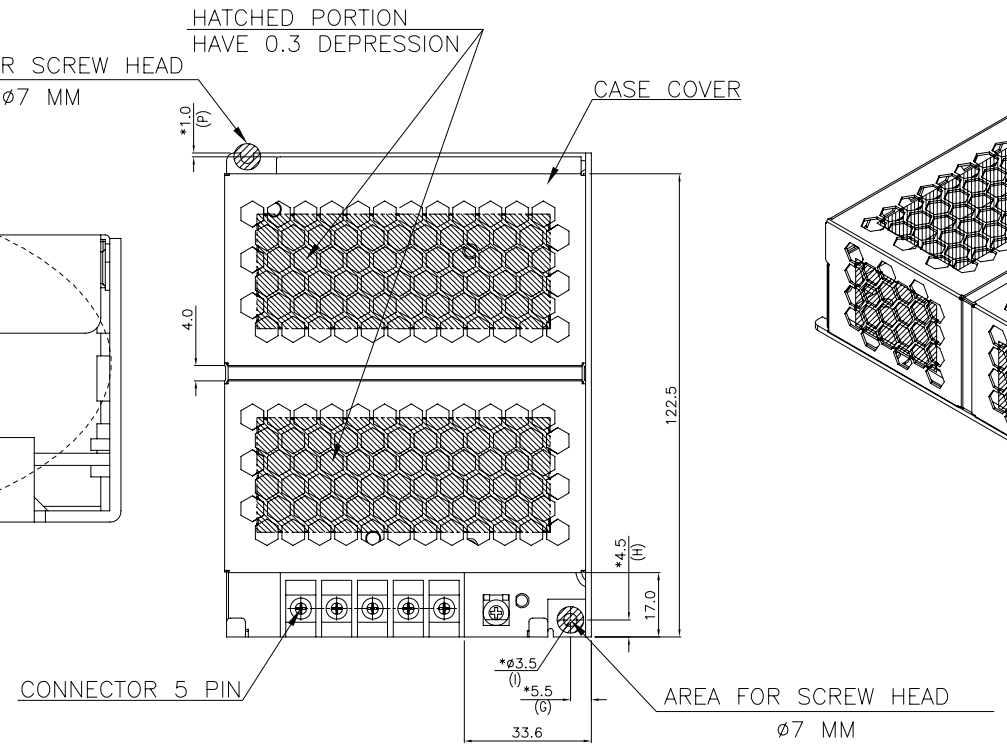

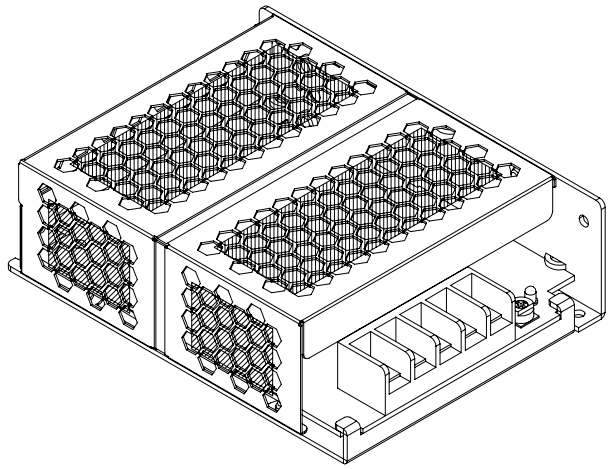

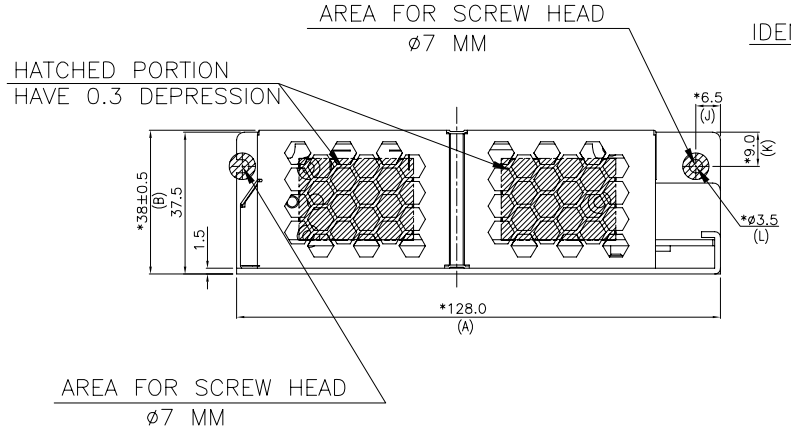

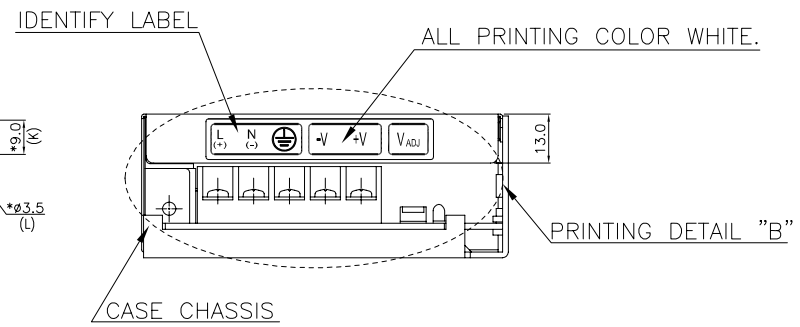

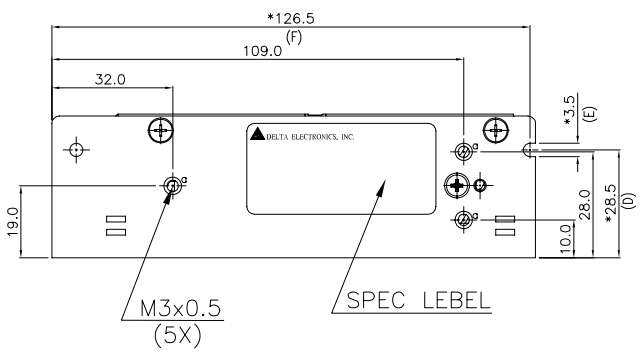

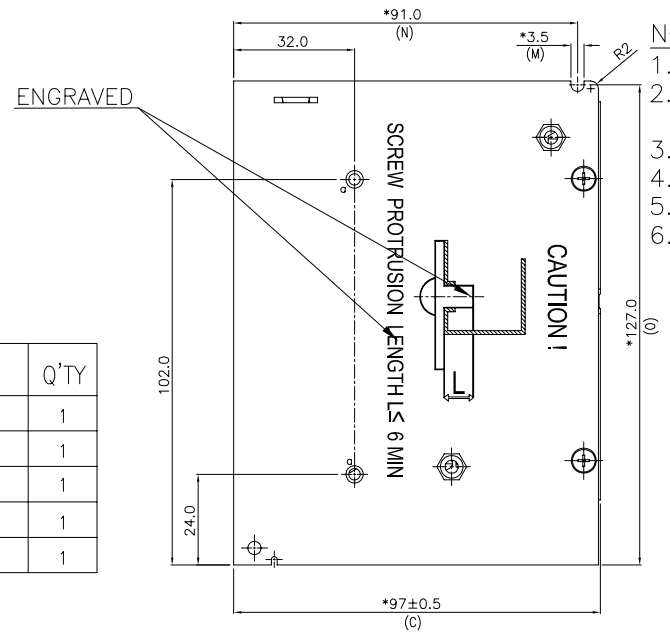

NOTES:
1.MARK (*) DIMENSIONS ARE CONTROL DIMENSION.
2.PRODUCT SURFACE SHOULD BE CLEAN, NO DENT AND FREE FROM TOOLING MARK.
3.SPEC LABEL DETAIL AND PRINTING CONTENTS REFER TO SN.
4.EXTRUDE HOLE WITH THREAD MUST MEET TORQUE 8 KG-CM(min.)
5.ENGRAVING ON CHASSIS MUST BE VISIBLE.
6.MUST MEET DELTA GENERAL STANDARD: 10000-0162

ITEM	DESCRIPTION	DELTA P/N	Q'TY
1	CASE CHASSIS	33160215XX	1
2	CASE COVER	33160218XX	1
3	CONNECTOR 5 PIN	30704950XX	1
4	SPEC LABEL	32680958XX	1
5	IDENTIFY LABEL	32620387XX	1

台達電子工業股份有限公司
DELTA ELECTRONICS, INC.

DRAWN: | DESIGN:
DATE: | ECN NO.:

THESE DRAWINGS AND SPECIFICATIONS ARE THE PROPERTY OF DELTA ELECTRONICS, INC. AND SHALL NOT BE REPRODUCED OR USED AS THE BASIS FOR THE MANUFACTURE OR SELL OF APPARATUSES OR DEVICES WITHOUT PERMISSION.

DIMENSIONAL TOLERANCES

DECIMALS	( )	( )	( )	( )	ANGLES
X	±0.3	<50 ±0.1	<50 ±0.15	<50 ±0.2	<30° ±0.1°
X.X	±0.2	>50~100 ±0.15	>50~100 ±0.2	>50~100 ±0.25	>30°~60° ±0.3°
X.XX	±0.1	>100~200 ±0.2	>100~200 ±0.25	>100~200 ±0.3	>60°~90° ±0.5°
		>200~ ±0.2%	>200~ ±0.25%	>200~ ±0.3%	

DRAWING NAME: PHYSICAL DIMENSION DRAWING
A3 SIZE | THIRD ANGLE PROJECTION
PART NO.: PMC-24V050W1AA
REV.
USED ON | UNIT mm | SCALE | SHEET 1 OF 1

DF-MEA3H-3R01