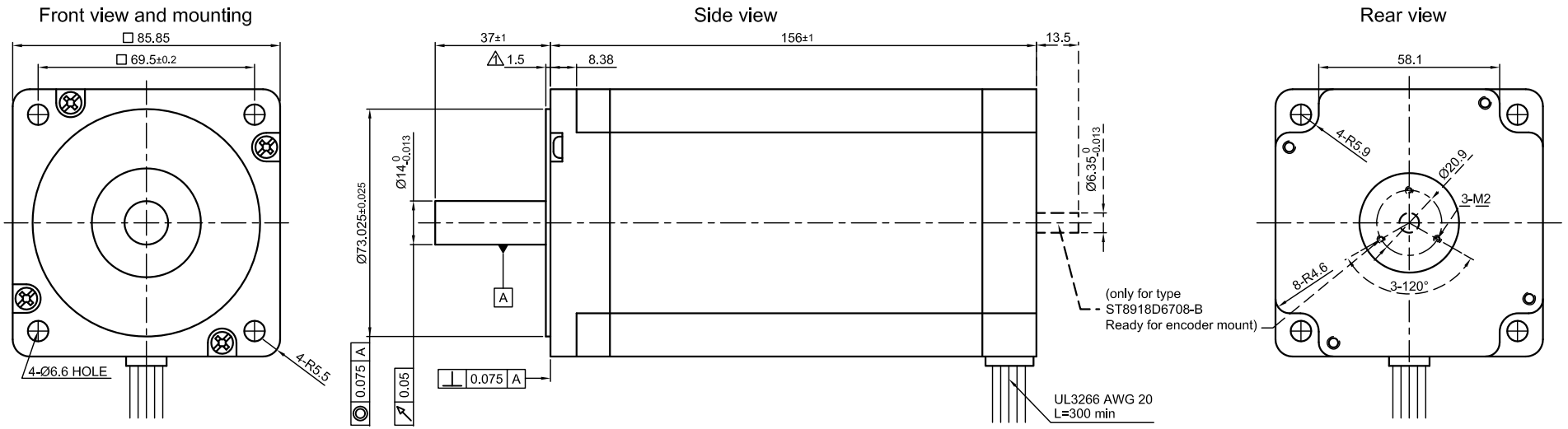

SPECIFICATION \ CONNECTION	UNIPOLAR OR BIPOLAR-1 WINDING	BIPOLAR SERIAL	BIPOLAR PARALLEL
VOLTAGE (VDC) 3	5.03		
AMPS/PHASE	6.7	4.7	9.5
RESISTANCE/PHASE (Ohms)@25°C 3	0.75±15%	1.28±15%	0.32±15%
INDUCTANCE/PHASE (mH) @1KHz	4.9±20%	19.6±20%	4.9±20%
HOLDING TORQUE (Nm) [lb-in]	9.5 [84.1]	12 [106]	12 [106]
DETENT TORQUE (Nm) [lb-in]	0.285 [2.522]		
STEP ANGLE (°) ± STEP ACCURACY	1.8 ± 5% (NON-ACCUM)		
BACK-EMF (V) (300 U/min)		62 1 2	
ROTOR INERTIA (Kg-m^2) [lb-in^2]	4.0x10^{-4} [1.37]		
WEIGHT (Kg) [lb]	5.4 [11.9]		

TEMPERATURE RISE: MAX.80°C (MOTOR STANDSTILL; FOR 2 PHASE ENERGIZED)
AMBIENT TEMPERATURE -20°~ 50°C [-4°F ~ 122°F]
INSULATION RESISTANCE 100 MOhm (UNDER NORMAL TEMPERATURE AND HUMIDITY)
INSULATION CLASS B 130° [266°F] (PROTECTION IP30-WITH TERMINAL BOX IP54)
DIELECTRIC STRENGTH 500VAC FOR 1 MIN. (BETWEEN THE MOTOR COILS AND THE MOTOR CASE)
AMBIENT HUMIDITY MAX. 85% (NO CONDENSATION)

PERMISSIBLE RADIAL+AXIAL FORCE

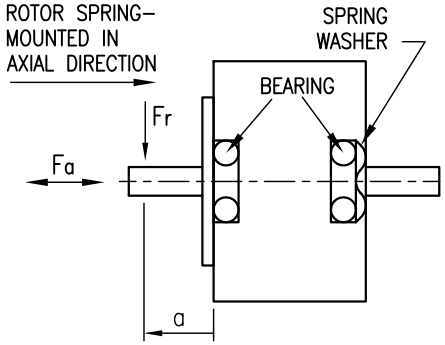

AXIAL-FORCE Fa (N)	Fa=65			
DISTANCE a (mm)	5	10	15	20
RADIAL-FORCE Fr (N)	535	355	256	200

	AXIAL	RADIAL
SHAFT PLAY (mm)	0.075	0.025
AT LOAD MAX: (N)	10	5.0

TYPE OF CONNECTION (EXTERN)				MOTOR	
UNIPOLAR	BIPOLAR 1WINDING	BIPOLAR SERIAL	BIPOLAR PARALLEL	LEADS	WINDING
A	A	A	A	RED	A
COM				RED/WHT	
A\		A\	A\	BLK/WHT	
B	B	B	B	BLK	A\
COM				GRN	B
B\		B\	B\	GRN/WHT	
				YEL/WHT	
				YEL	B\

FULL STEP 2 PHASE-Ex.,
WHEN FACING MOUNTING END (X)

STEP	A	B	A\	B\		CCW
1	+	+	-	-		
2	-	+	+	-		
3	-	-	+	+		
4	+	-	-	+	CW	

WIRING DIAGRAM

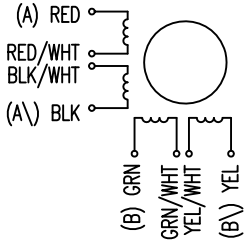

REV	DESCRIPTION	DATE	APVD
3	NEW VALUE OF RESISTANCE	20.10.09	J.W.
2	EMF VALUE FROM 65V IN 62V	24.06.09	J.W.
1	HEIGHT OF FLANGE+EMF VALUE	09.02.09	J.W.

Nanotec® PLUG & DRIVE

ST8918D6708

SCALE FREE	
X	±0.5
1PL	±0.2
2PL	±0.1
ANGLE	±30'

	SIGNATURE	DATE
APVD	S.Ha.	11.11.08
CHKD		
DRN	J.W.	11.11.08

STEPPING MOTOR

DWG.NO ST8918D6708