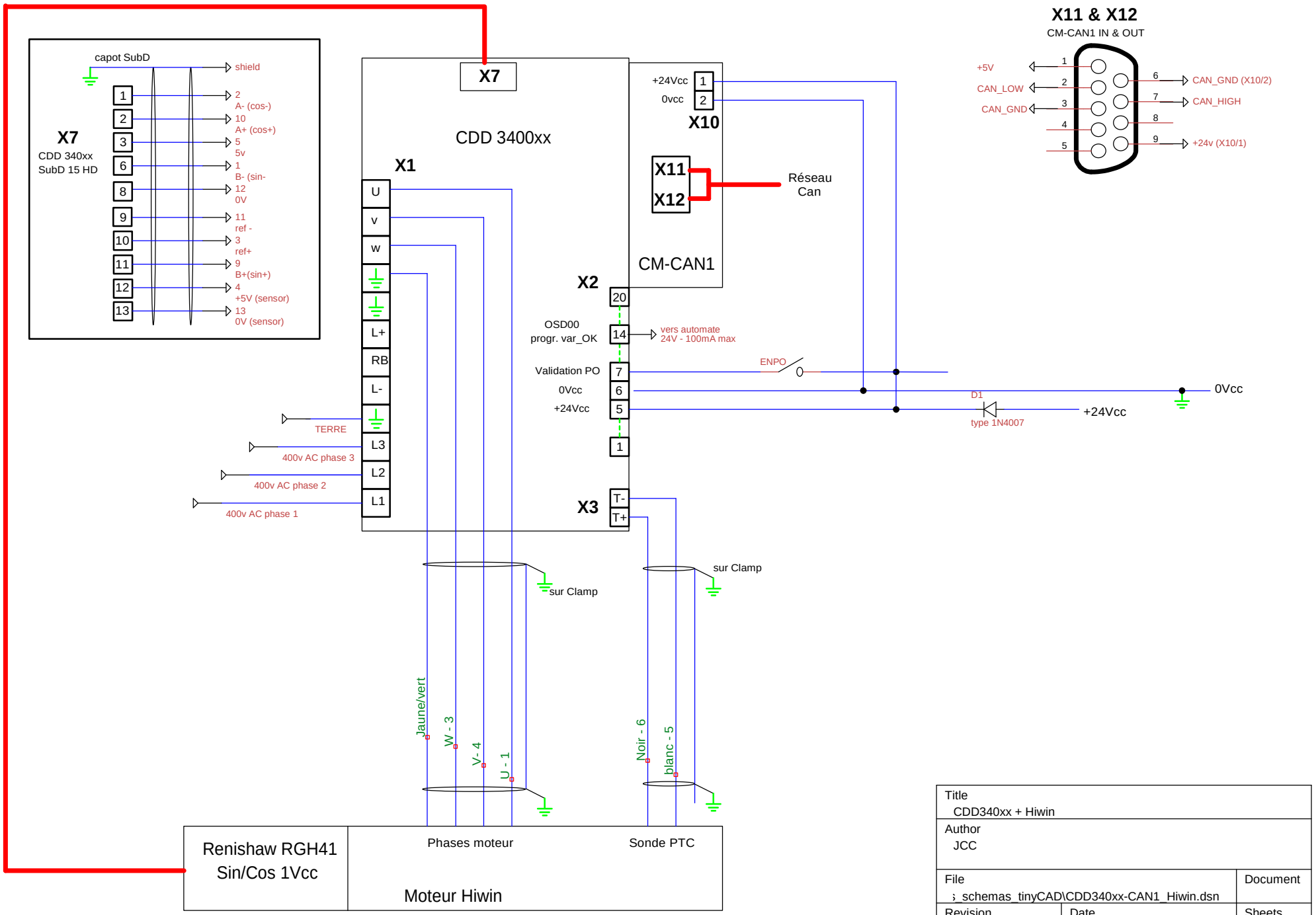

Title CDD340xx + Hiwin		
Author JCC		
File ; schemas_tinyCAD\CDD340xx-CAN1_Hiwin.dsn		Document
Revision 1.0	Date 21/07/08	Sheets 1 of 1